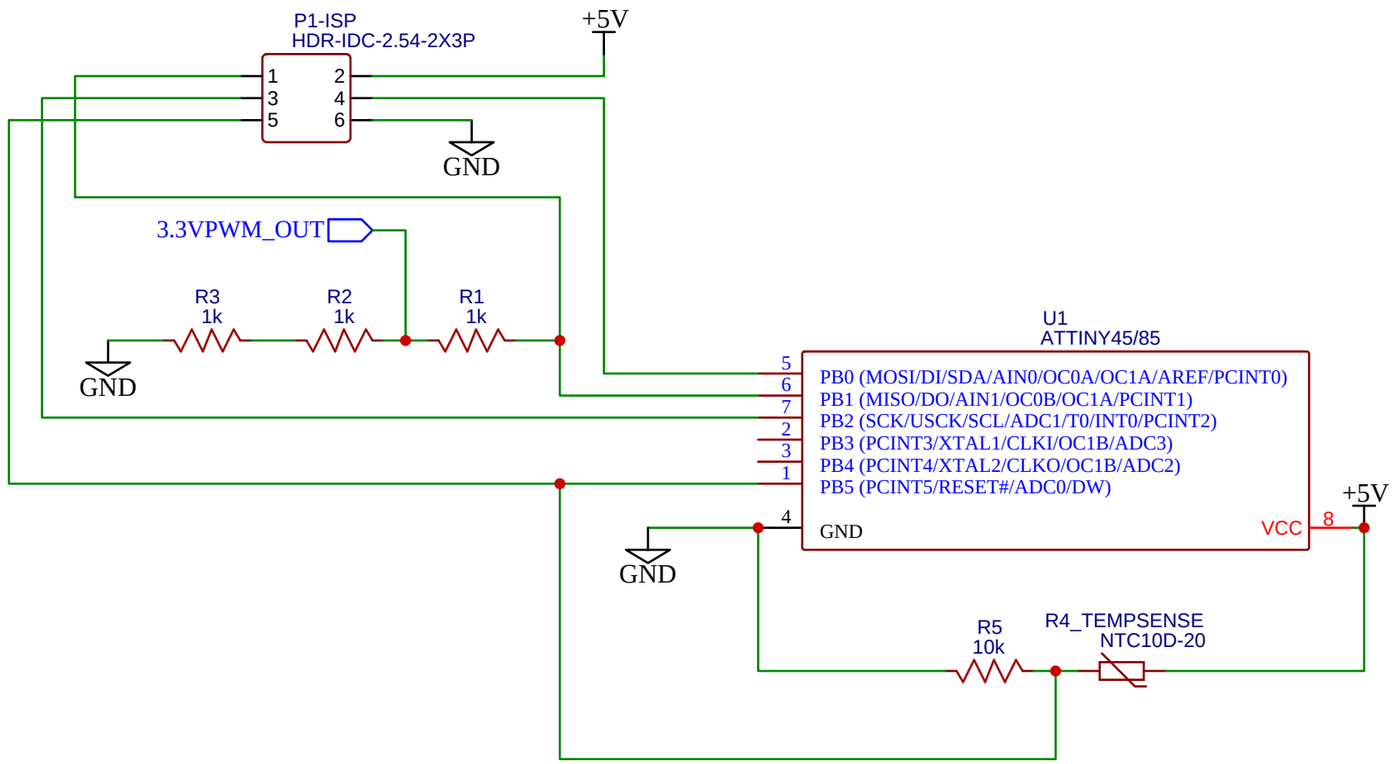

TITLE: Attiny45 PWM controller		REV: 1.0
嘉立创EDA	Company: LILiK	Sheet: 1/1
	Date: 2023-06-17 Drawn By:	